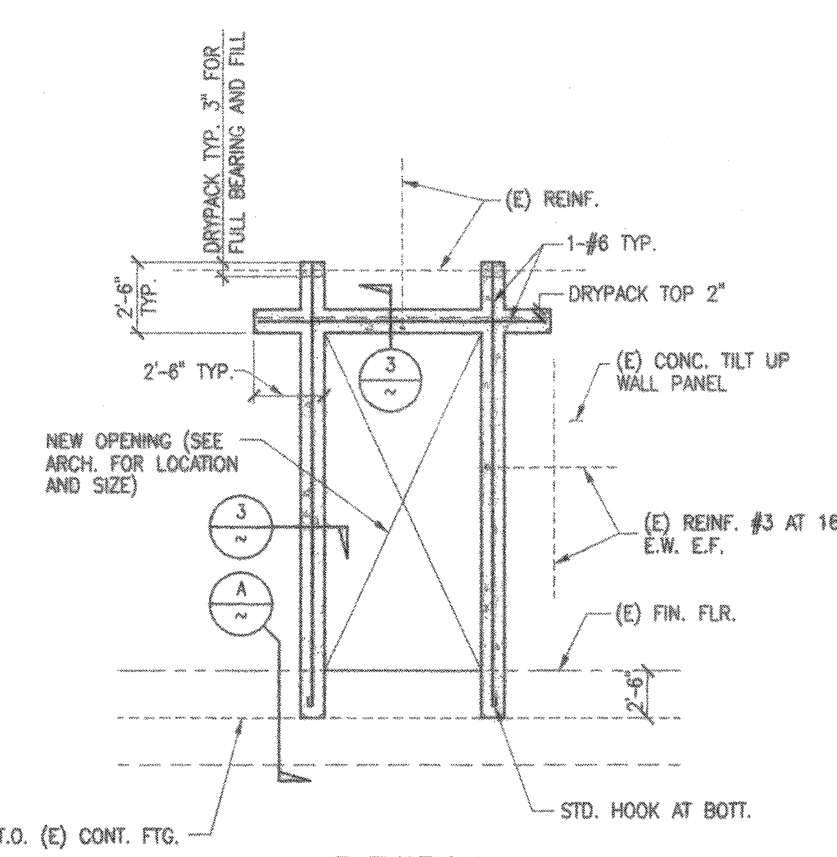

ELEVATION

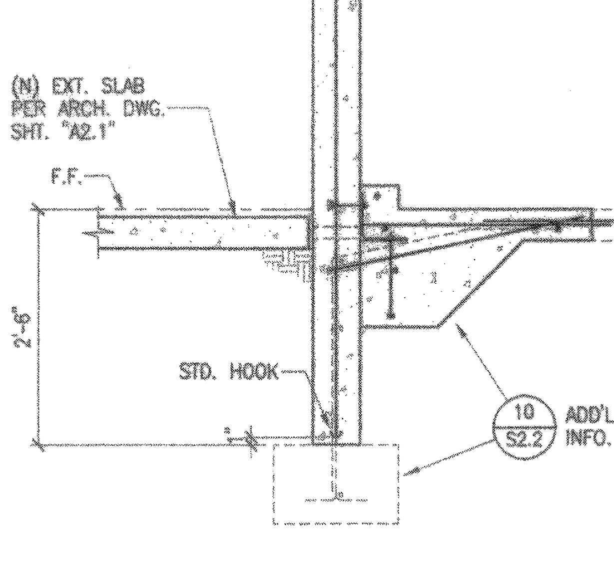

SECTION (A)

DEMOLITION

1. ALL DEMOLITION SHALL BE CARRIED ON IN SUCH A WAY AS NOT OT DAMAGE EXISTING ELEMENTS WHICH ARE TO BE IN THE FINISHED BUILDING.
2. ALL ELEMENTS OF THE STRUCTURE WHICH ARE TO REMAIN AND WHICH ARE DAMAGED DURING DEMOLITION WORK SHALL BE REPLACED AT NO ADDED COST. EXISTING ELEMENTS TO BE PROTECTED TO THE FULLEST EXTENT POSSIBLE TO REDUCE SUCH DAMAGE TO A MINIMUM.

PROCEDURE FOR PROVIDING A NEW DOOR OPENING IN AN EXISTING CONCRETE PANEL WALL

1. DELINEATE LINES TO BE CUT ON ONE SIDE OF THE WALL.
2. DRILL 1"Ø MINIMUM HOLES AS SHOWN SO THAT LINES ON OPPOSITE SIDE CAN BE DRAWN.
3. SAW CUT 1/2" DEEP ALONG THOSE DELINEATED LINES WITHOUT OVER CUTTING.
4. CHIP AND REMOVE THE EXISTING CONCRETE WITHOUT DAMAGING THE EXISTING REINFORCING.
5. SANDBLAST EXISTING CONCRETE SURFACES CLEAN OF LOOSE CONCRETE.
6. INSTALL NEW JAMB BARS AFTER DRILLING HOLES IN THE WALL AT FLOOR LEVEL. BEND EXISTING HORIZONTAL BARS AND CUT OFF EXCESS.
7. INSTALL NEW HEAD BARS. BEND EXISTING VERTICAL BARS AS SHOWN AND CUT OFF EXCESS.
8. PROVIDE FORMS AND POUR CONCRETE.

(1)

TESTING AND INSPECTION REQUIREMENTS

(A) POST-INSTALLED ANCHORS IN CONCRETE SHALL BE TESTED IN ACCORDANCE WITH THE PROVISIONS OF SECTION 1916A.8, 2007 CBC AND DSA IR 19-1 BY AN LEA ACCEPTED TESTING FACILITY, UNLESS APPROVAL OF AN ALTERNATIVE INDIVIDUAL IS OBTAINED IN ADVANCE FROM THE DSA FILED ENGINEER FOR THE PROJECT.

1. WHEN EXPANSION-TYPE ANCHORS ARE LISTED FOR SILL PLATE BOLTING APPLICATIONS, 10 PERCENT OF THE ANCHORS SHALL BE TENSION TESTED.
2. WHEN EXPANSION-TYPE ANCHORS ARE USED FOR OTHER STRUCTURAL APPLICATIONS, ALL SUCH EXPANSION ANCHORS SHALL BE TENSION TESTED.
3. WHEN EXPANSION-TYPE ANCHORS ARE USED FOR NONSTRUCTURAL APPLICATIONS SUCH AS EQUIPMENT ANCHORAGE, 50 PERCENT OR ALTERNATE BOLTS IN A GROUP, INCLUDING AT LEAST ONE-HALF THE ANCHORS IN EACH GROUP, SHALL BE TENSION TESTED.
4. THE TENSION TESTING OF THE EXPANSION ANCHORS SHALL BE DONE IN THE PRESENCE OF THE PROJECT INSPECTOR AND A REPORT OF THE TESTING RESULTS SHALL BE SUBMITTED TO THE ENFORCEMENT AGENCY. IF ANY ANCHORS FAIL THE TENSION-TESTING REQUIREMENTS, THE ADDITIONAL TESTING REQUIREMENTS SHALL BE ACCEPTABLE TO THE ENFORCEMENT AGENCY. THE ABOVE REQUIREMENTS SHALL ALSO APPLY TO BOLTS OR ANCHORS SET IN CONCRETE WITH CHEMICAL (ADHESIVES) IF LONG-TERM DURABILITY AND STABILITY THE CHEMICAL MATERIAL AND ITS RESISTANCE TO LOSS OF STRENGTH AND CHEMICAL CHANGE AT ELEVATED TEMPERATURES ARE ESTABLISHED TO THE SATISFACTION OF THE ENFORCEMENT AGENCY.

(B) IF ANY ANCHOR FAILS TESTING, TEST ALL ANCHORS OF THE SAME TYPE, NOT PREVIOUSLY TESTED UNTIL TWENTY (20) CONSCUTIVE ANCHORS PASS, THEN RESUME THE INITIAL TEST FREQUENCY. IF THE ANCHORS ARE USED FOR THE SUPPORT AND BRACING OF NON-STRUCTURAL COMPONENTS (PIPE, DUCT OR CONDUIT), THE TWENTY SHALL BE ONLY THOSE ANCHORS INSTALLED BY THE SAME TRADE. REFER TO NOTE 8 ON THE TEST VALUES TABLE I FOR ACCEPTANCE/FAILURE CRITERIA.

(C) EXPANSION-TYPE ANCHORS IN CONCRETE

1. SETTING VERIFICATION:
   a. TORQUE-CONTROLLED ANCHORS: FOLLOWING ATTAINMENT OF 10% OF THE REQUIRED TORQUE, TORQUE-CONTROLLED ANCHORS SHALL NOT REQUIRE MORE THAN SIX (6) ADDITIONAL COMPLETE TURNS OF THE NUT DURING INSTALLATION TO ACHIEVE THE MANUFACTURER'S SPECIFIED INSTALLATION TORQUE. THE EXTENT OF THE BOLT PROJECTION AFTER INSTALLATION SHALL BE MEASURED TO CONFIRM THAT THIS REQUIREMENT HAS BEEN MET.
   b. DISPLACEMENT-CONTROLLED ANCHORS: THE POSITION OF THE PLUG IN THE ANCHOR SHELL, SHALL BE CHECKED WITH THE MANUFACTURER-SUPPLIED INSTALATION TOOL OR OTHER APPROPRIATE DEVICE. THE POSITION OF THE PLUG SHALL CONFORM TO THE MANUFACTURER-SUPPLIED.
2. TESTING: SEE THE NOTES UNDER TEST VALUES FOR ACCEPTABLE TESTING PROCEDURES. THE TEST LOAD MAY BE APPLIED BY ANY METHOD THAT WILL EFFECTIVELY MEASURE THE TENSION IN THE ANCHOR, SUCH AS DIRECT PULL WITH A HYDRAULIC JACK, CALIBRATED SPRING LOADED DEVICE, OR A CALIBRATED TORQUE WRENCH. DISPLACEMENT-CONTROLLED ANCHORS SUCH AS DROP-INS SHALL NOT BE TESTED USING A TORQUE WRENCH.

(D) EPOXY-TYPE (ADHESIVE) ANCHORS IN CONCRETE

EPOXY-TYPE (ADHESIVE) ANCHORS SHALL BE TENSION TESTED PER SECTION 1916A.8, 2007 C.B.C. AND DSA IR 19-1. THE TENSION TEST LOAD SHALL EQUAL TO TWICE ALLOWABLE LOAD FOR THE SPECIFIC LOCATION OF THE ANCHOR TO BE TESTED (i.e., ACCOUNTING FOR EDGE DISTANCE) OR 80% OF THE YIELD STRENGTH OF THE BOLT ($0.8A_bF_y$), WHICHEVER IS LESS. THE TEST PROCEDURES FOR EXPANSION-TYPE ANCHORS OF TABLE I SHALL ALSO BE USED FOR EPOXY-TYPE (ADHESIVE) ANCHORS. TORQUE TESTING OF EPOXY-TYPE (ADHESIVE) ANCHORS IS NOT PERMITTED. WHERE EPOXY-TYPE (ADHESIVE) ANCHORS ARE USED AS SHEAR DOWELS ACROSS COLD JOINTS IN SLABS ON GRADE AND THE SLAB IS NOT PART OF THE STRUCTURAL SYSTEM, TESTING OF THOSE DOWELS IS NOT REQUIRED. ANCHORS SHALL EXHIBIT NO DISCERNIBLE MOVEMENT DURING THE TENSION TEST.

TEST VALUES TABLE I

HARDROCK OR LIGHTWEIGHT CONCRETE

ANCHOR	WEDGE		SLEEVE		SHELL	
DIAMETER (in.)	LOAD (in.)	TORQUE (Ft. lbs.)	LOAD (in.)	TORQUE (Ft. lbs.)	LOAD (in.)	TORQUE (Ft. lbs.)
1/4	800	10	400	4	1000	-
5/16	-	-	400	5	1400	-
3/8	1100	25	700	10	1800	-
1/2	2000	50	900	20	2700	-
5/8	2300	80	1100	45	3700	-
3/4	3700	150	1400	90	5400	-
1	5800	250	-	-	-	-

NOTES FOR TABLE I

1. ANCHOR DIAMETER REFERS TO THE THREAD SIZE FOR THE WEDGE & SHELL CATEGORIES, AND TO THE ANCHOR OUTSIDE DIAMETER FOR THE SLEEVE CATEGORY.
2. APPLY PROOF TEST LOADS TO WEDGE & SLEEVE ANCHORS WITHOUT REMOVING THE NUT IF POSSIBLE. IF NOT, REMOVE NUT AND INSTALL A THREADED COUPLER TO THE SAME TIGHTNESS AS THE ORIGINAL NUT USING A TORQUE WRENCH TO APPLY THE TEST LOAD.
3. FOR SLEEVE/SHELL INTERNALLY THREADED CATEGORIES, VERIFY THAT THE ANCHOR IS NOT PREVENTED FROM WITHDRAWING BY A BASEPLATE OR OTHER FIXTURE. IF RESTRAINT IS FOUND, LOOSEN AND SHIM OR REMOVE FIXTURE(S) PRIOR TO TESTING.
4. REACTION LOADS FROM TEST FIXTURES MAY BE APPLIED CLOSE TO THE ANCHOR BEING TESTED, PROVIDED ANCHOR IS NOT PERMITTED FROM WITHDRAWING BY THE FIXTURE(S).
5. SHELL TYPE ANCHORS SHOULD BE TESTED AS FOLLOWS:
   a. VISUALLY INSPECT 25% FOR FULL EXPANSION AS EVIDENCED BY THE LOCATION OF THE EXPANSION PLUG IN THE ANCHOR BODY. PLUG LOCATION OF A FULLY EXPANDED ANCHOR SHOULD BE AS RECOMMENDED BY THE MANUFACTURER, OR, IN THE ABSENCE OF SUCH RECOMMENDATION, AS DETERMINED ON THE JOB SITE FOLLOWING THE MANUFACTURER'S INSTALLATION INSTRUCTIONS. AT LEAST 5% OF THE ANCHORS SHALL BE PROOF LOADED AS INDICATED IN THE TABLE ABOVE, BUT NOT LESS THAN THREE ANCHORS PER DAY FOR EACH DIFFERENT PERSON OR CREW INSTALLING ANCHORS, OR;
   b. TEST INSTALLED ANCHORS PER SECTION 1916A.8, 2007 C.B.C. AND DSA IR 19-1.
6. TEST EQUIPMENT (INCLUDING TORQUE WRENCHES) IS TO BE CALIBRATED BY AN APPROVED TESTING LABORATORY IN ACCORDANCE WITH STANDARD RECOGNIZED PROCEDURES.
7. ALTERNATE TORQUE TEST PROCEDURES AND TEST VALUES FOR SHELL TYPE ANCHORS MAY BE SUBMITTED TO THE ENFORCEMENT AGENCY FOR REVIEW AND APPROVAL ON A CASE-BY-CASE BASIS WHEN TEST PROCEDURES ARE SUBMITTED AND APPROVED BY THE ENFORCEMENT AGENCY.
8. THE FOLLOWING CRITERIA APPLY FOR THE ACCEPTANCE OF INSTALLED ANCHORS:
   a. HYDRAULIC RAM METHOD: THE ANCHOR SHOULD HAVE NO OBSERVABLE MOVEMENT AT THE APPLICABLE TEST LOAD. FOR WEDGE AND SLEEVE TYPE ANCHORS, A PRACTICAL WAY TO DETERMINE OBSERVABLE MOVEMENT IS THAT THE WASHER UNDER THE NUT BECOMES LOOSE.
   b. TORQUE WRENCH METHOD: THE APPLICABLE TEST TORQUE MUST BE REACHED WITHIN THE FOLLOWING LIMITS:
      i. WEDGE OR SLEEVE TYPE: ONE-HALF (1/2) TURN OF THE NUT.
      ii. ONE-QUARTER (1/4) TURN OF THE NUT FOR THE 3/8" SLEEVE ANCHOR ONLY.
9. IF THE MANUFACTURER'S RECOMMENDED INSTALLATION TORQUE IS LESS THAN THE TEST TORQUE NOTED IN THE TABLE, THE MANUFACTURER'S RECOMMENDED INSTALLATION TORQUE SHOULD BE USED IN LIEU OF THE TABULATED VALUES.

DRILLED-IN EXPANSION AND EPOXY-TYPE BOLTS NOTES

(A) DRILLED-IN EXPANSION BOLTS IN CONCRETE SHALL BE HILTI "KWIK BOLT TZ", PER ICC ESR-1917 AND DSA IR 19-1. SEE TEST VALUE TABLE 1.
(B) ADHESIVE ANCHORS IN CONCRETE SHALL BE HILTI "HIT-RE 500 SD", ICC ESR-2322 INSTALLATION SHALL BE IN ACCORDANCE WITH ICC APPROVAL AND DSA IR 19-1. SEE TENSION TEST LOAD TABLE 2. SEE NOTE 'G' ALSO.
(C) INSTALLATION SHALL BE CONTINUOUSLY INSPECTED IN ACCORDANCE WITH ICC APPROVAL.
(D) LOAD TEST DRILLED-IN EXPANSION BOLTS AND EPOXY-TYPE ANCHORS IN CONCRETE FOR VALUES SHOWN U.N.O. IN ACCORDANCE WITH CBC, SECTION 1916A.8 AND DSA IR 19-1.
(E) USE EXPANSION BOLTS OR EPOXY-TYPE ANCHORS ONLY WHERE SPECIFICALLY CALLED OUT ON THE PLANS OR DETAILS. EXPANSION BOLTS OR EPOXY-TYPE BOLTS SHALL NOT BE USED WHERE IN PLACE ANCHOR BOLTS ARE SPECIFIED.
(F) CARBON STEEL EXPANSION ANCHORS SHALL BE USED ONLY FOR INTERIOR DRY LOCATIONS. USE HOT-DIPPED GALVANIZED OR STAINLESS STEEL ANCHORS FOR EXTERIOR APPLICATIONS, OR OTHERWISE NOT PROTECTED FROM MOISTURE.
(G) WHERE ADHESIVE GROUT NOTE IS INDICATED ON THIS PROJECT, HILTI RE-500 SD SHALL BE USED PER NOTE 'B' ABOVE.

TENSION TEST LOADS (POUNDS)-TABLE 2

HILTI HIT-RE 500 SD IN CONCRETE

NOMINAL ANCHOR DIAMETER (in.)	NOMINAL REBAR SIZE	EMBEDMENT DEPTH (in.)	NOMINAL-WEIGHT CONCRETE f'c = 3000 PSI MIN. TEST VALUES
1/2	#4	3	4,718
1/2	#4	6 1/2	6,944
5/8	#5	8	10,390
3/4	#6	10	14,918
7/8	#7	12	16,220
1	#8	14	42,600

TORQUE TESTING OF EPOXY-TYPE (ADHESIVE) ANCHORS IS NOT PERMITTED.

DRILLED-IN EXPANSION BOLTS AND EPOXY-TYPE ANCHORS (2)

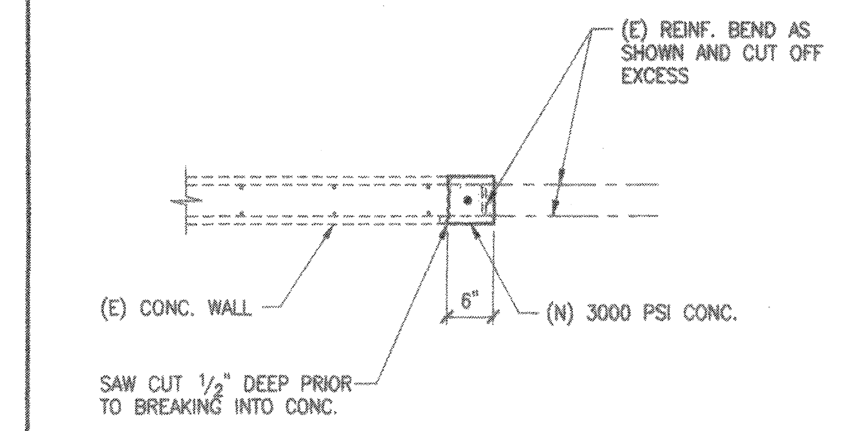

PLAN AT JAMB
(HEAD SIM.) (3)

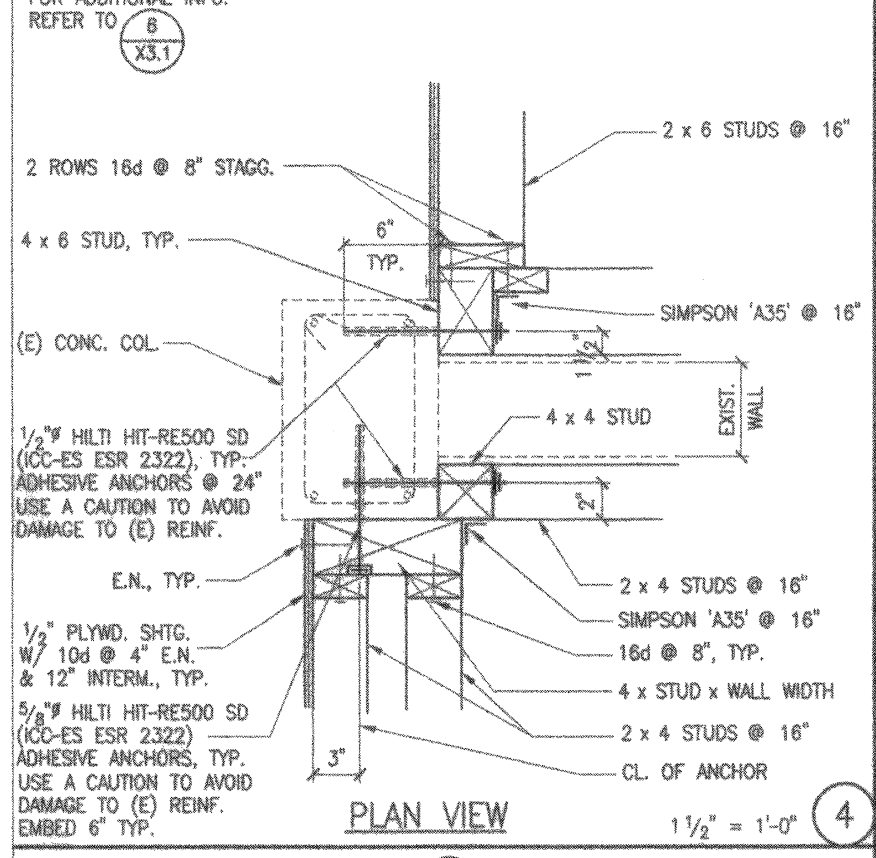

PLAN VIEW 1 1/2" = 1'-0" (4)

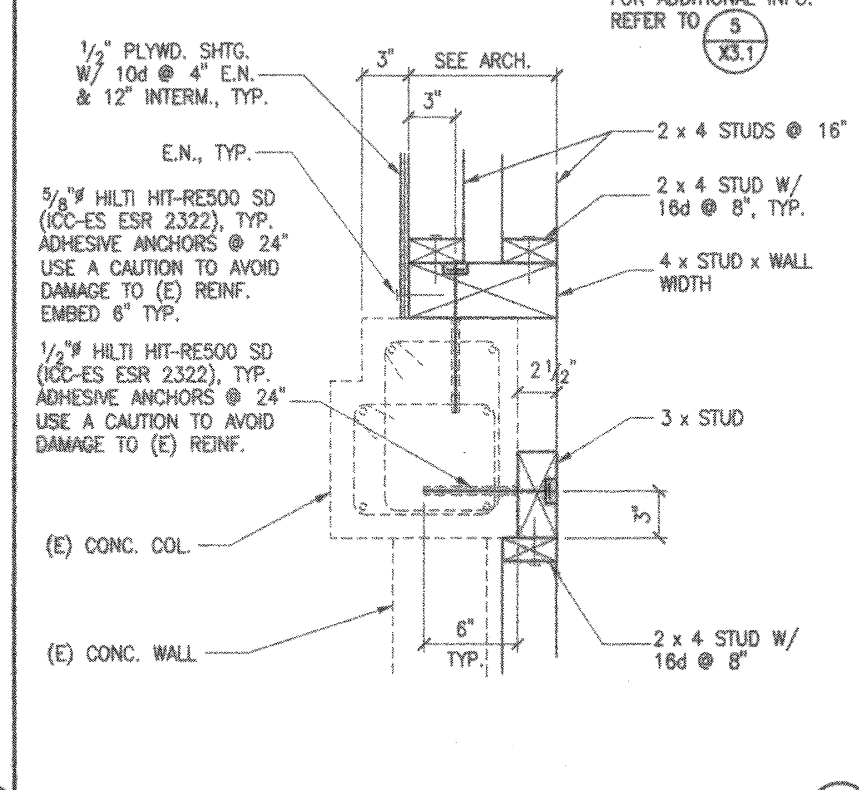

PLAN VIEW 1 1/2" = 1'-0" (5)

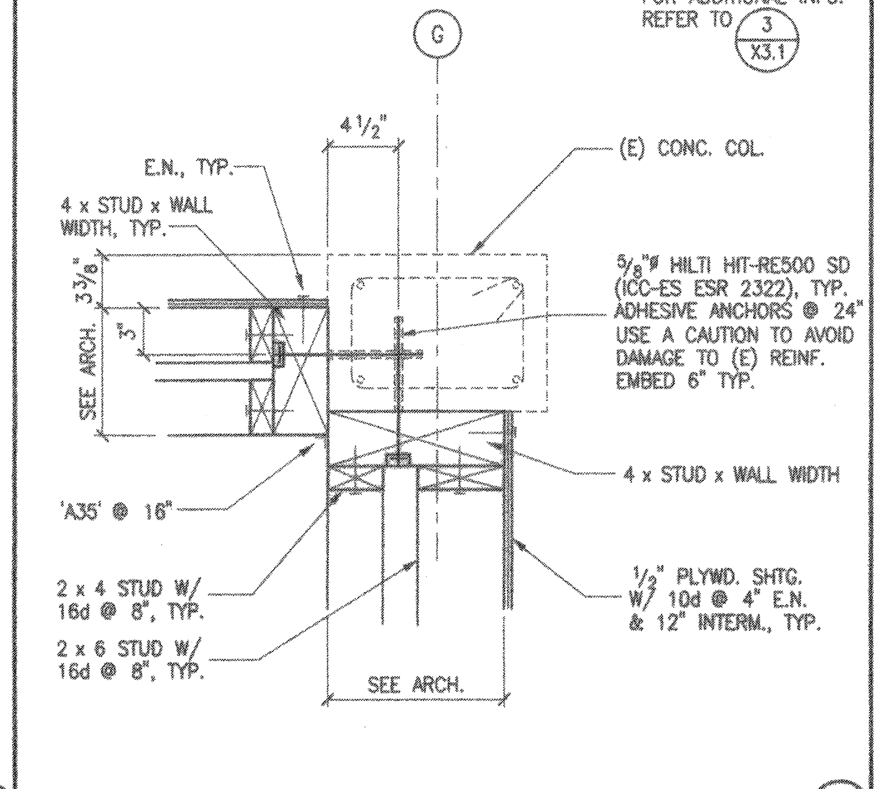

PLAN VIEW 1 1/2" = 1'-0" (6)

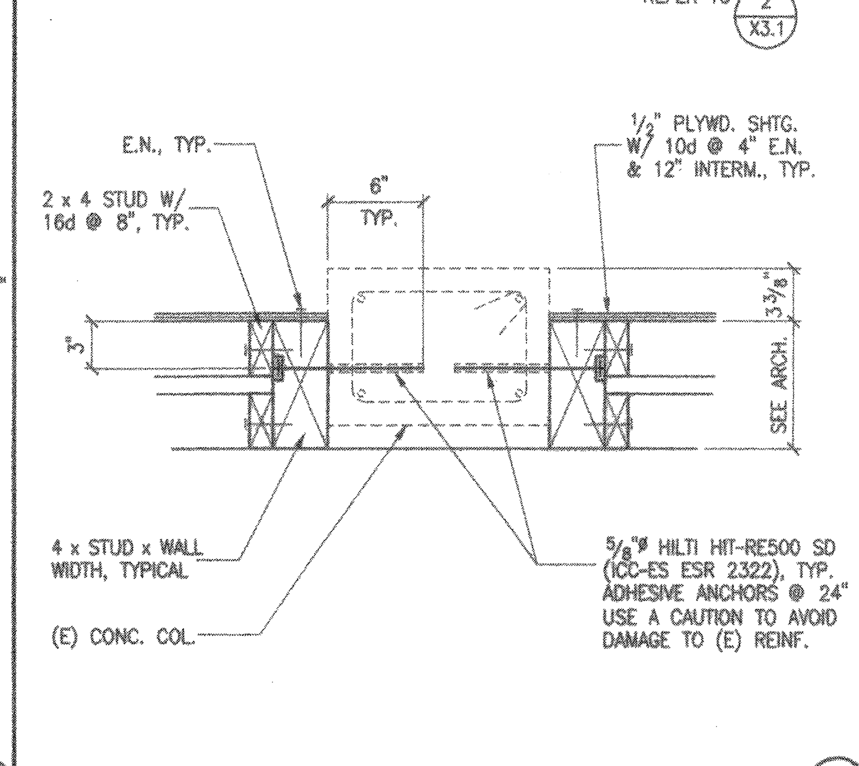

PLAN VIEW 1 1/2" = 1'-0" (7)

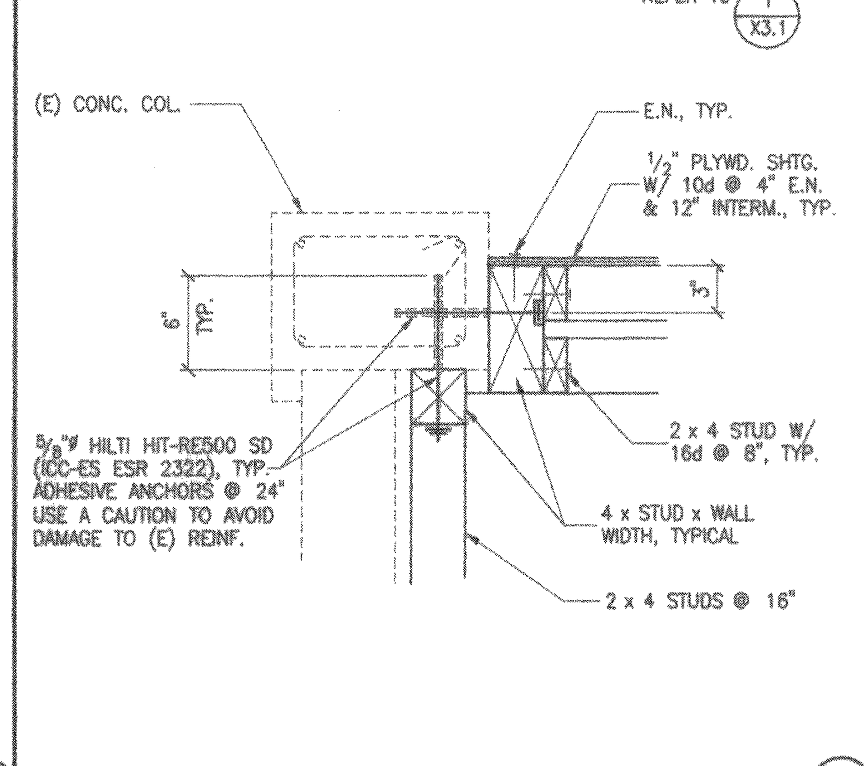

PLAN VIEW 1 1/2" = 1'-0" (8)

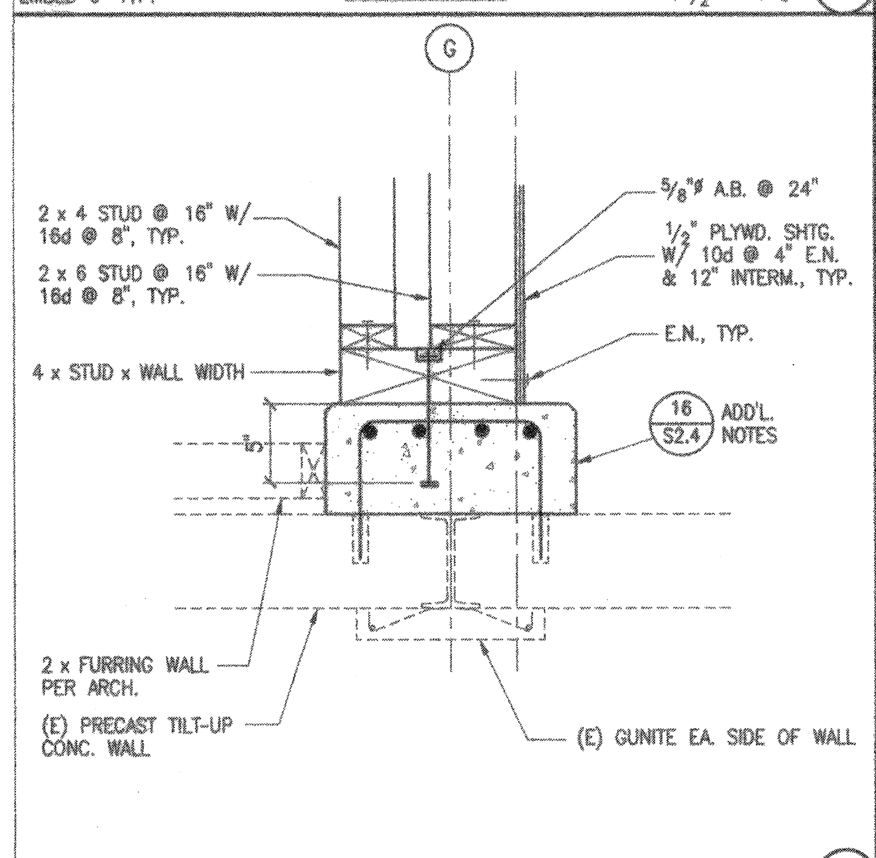

PLAN VIEW 1 1/2" = 1'-0" (9)

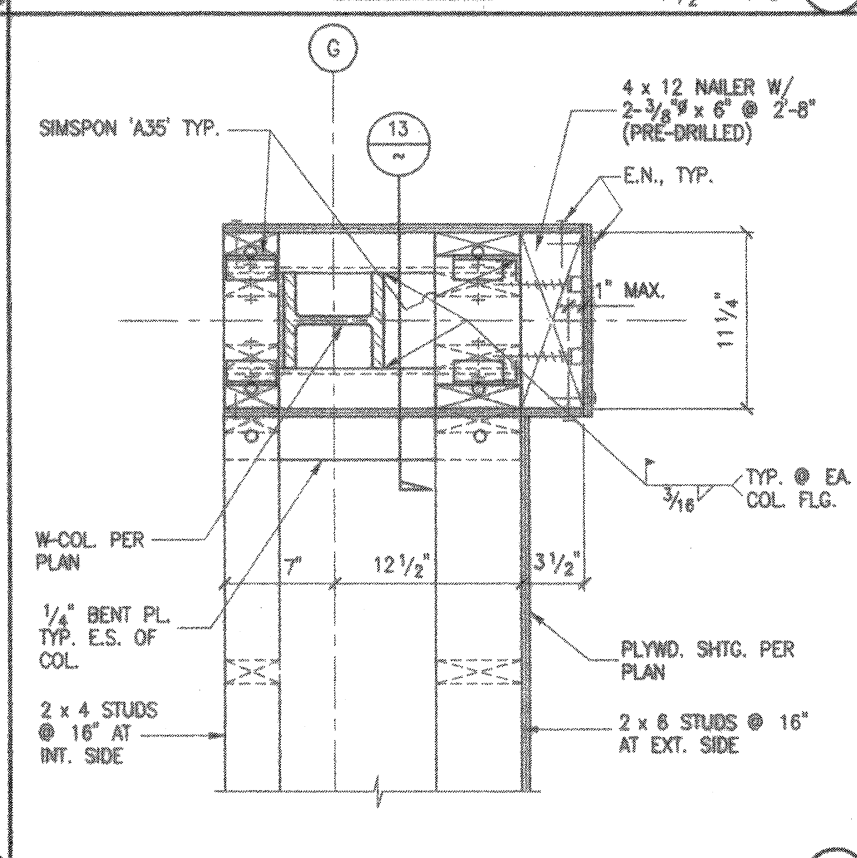

PLAN VIEW 1 1/2" = 1'-0" (10)

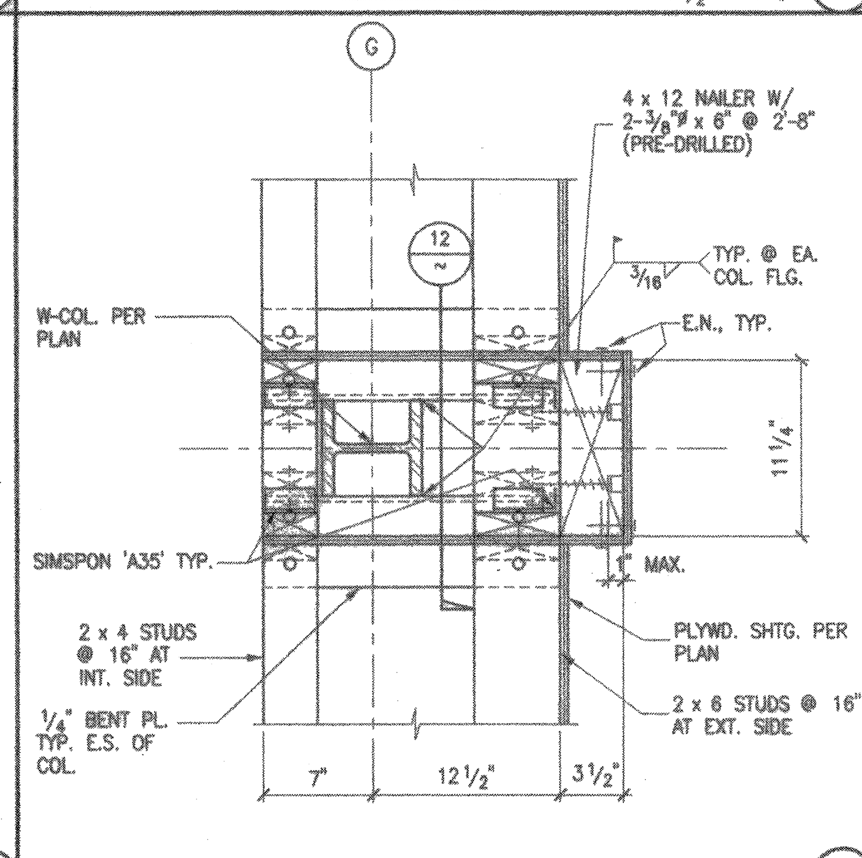

PLAN VIEW 1 1/2" = 1'-0" (11)

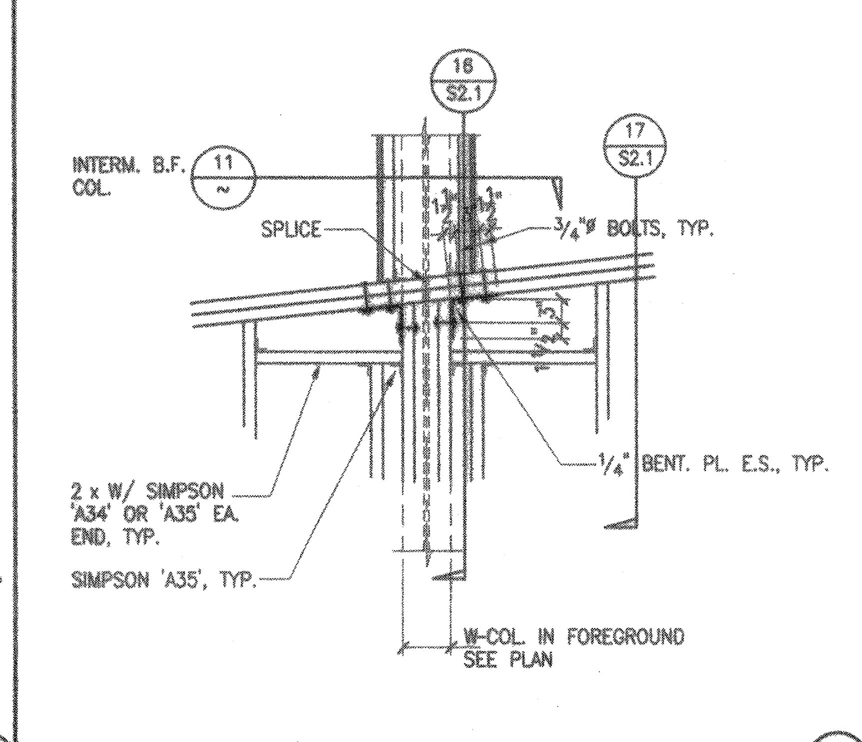

(12)

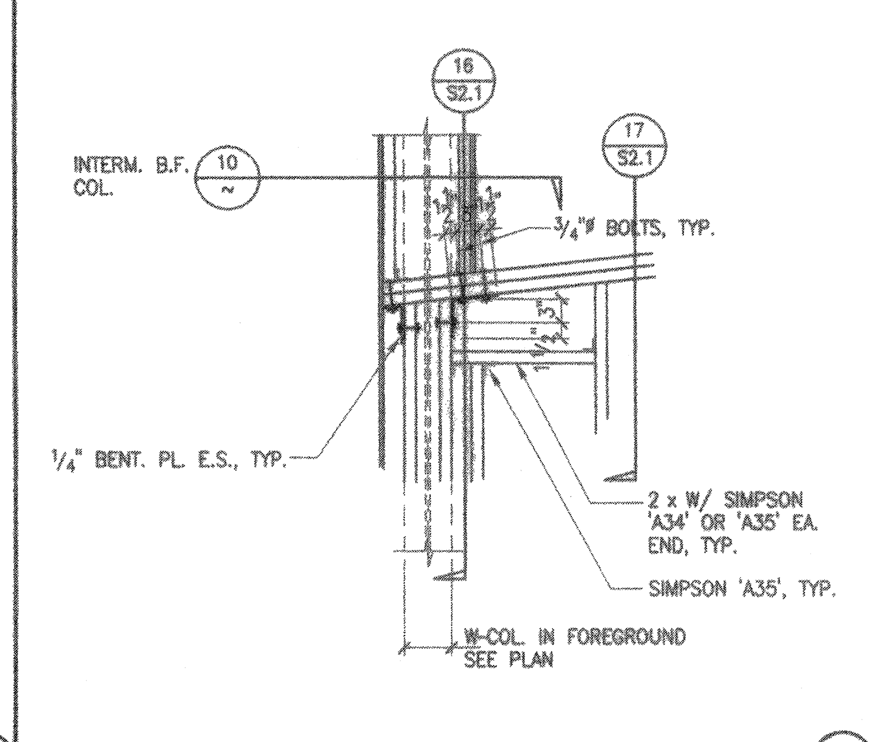

(13)

San Gabriel Unified School District
408 Junipero Serra
San Gabriel, CA 91776

IBI GROUP
ARCHITECTS ENGINEERS PLANNERS

ARCHITECT:
IBI Group
18401 Von Karman Avenue, Suite 110
Irvine, California 92612
Phone 949-833-5588
Fax 949-833-5511

STRUCTURAL ENGINEER:
Martin, Chow & Nakabara, Inc.
3185-C Airway Avenue
Costa Mesa, CA 92626
Phone 714-979-3003
Fax 714-979-3259
MCN 08006

MECHANICAL ENGINEER:
Fundament & Associates
26 Executive Park #100
Irvine, CA 92614
Phone 949-251-1131
Fax 949-251-9434

ELECTRICAL ENGINEER:
FBA
3420 Irvine Avenue, Suite 200
Newport Beach, CA 92660-3189
Phone 714-852-9995
Fax 714-852-1657

CIVIL ENGINEER:
Snipes-Dye Associates
8348 Center Drive, Suite G
La Mesa, CA 91942-2910
Phone 619-697-9234
Fax 619-460-2033

LANDSCAPE ENGINEER:
IBI Group
10 Exchange Place, Suite 112
Slat Lake City, UT 84111 USA
Phone 801-532-4233
FAX 801-532-4231

REGISTERED PROFESSIONAL ENGINEER
Masahiro G. Nakabara
NO. 2165
STRUCTURAL
STATE OF CALIFORNIA

File # 19-64
IDENTIFICATION STAMP
DIV. OF THE STATE ARCHITECT
OFFICE OF REGULATION SERVICES
03-112620
AC ____ FLS ____ SS ____
DATE ____

LICENSED ARCHITECT
KEVIN S. FLEMING
NO. C26666
08-31-11 RENEWAL DATE
STATE OF CALIFORNIA

This drawing, as an instrument of service, is the property of the Architect and may not be reproduced without their permission and unless the reproduction carries their name. All design and other information show on this drawing are for the use on the specified project only and shall not be used otherwise without written permission of the Architect.

Written dimensions shall have precedence over scaled dimensions. Contractors shall verify and be responsible for all dimensions and conditions on the job and the Architect shall be informed of any variations from the dimensions and conditions show on the drawing. Shop drawings shall be submitted to the Architect for approval before proceeding with fabrication.

Del Mar High School

312 Del Mar Ave
San Gabriel, CA 91776

TYPICAL DETAILS

Project Number	20318
Date	02.23.10
Drawn By	STF
Checked By	MGN

S0.3

Scale