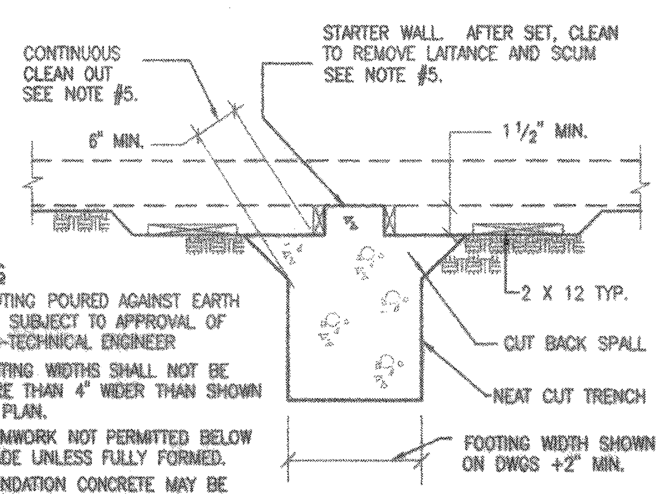

NOTES
1. FOOTING POURED AGAINST EARTH ARE SUBJECT TO APPROVAL OF GEO-TECHNICAL ENGINEER
2. FOOTING WIDTHS SHALL NOT BE MORE THAN 4" WIDER THAN SHOWN ON PLAN.
3. FORMWORK NOT PERMITTED BELOW GRADE UNLESS FULLY FORMED.
4. FOUNDATION CONCRETE MAY BE PLACED DIRECTLY INTO NEAT EXCAVATIONS PROVIDED THE FOUNDATION TRENCH WALLS ARE STABLE AS DETERMINED BY THE GEO-TECHNICAL ENGINEER. SUBJECT TO APPROVAL OF DSA. THE MIN. FORMWORK SHOWN ON THE DRAWINGS IS MANDATORY TO INSURE CLEAN EXCAVATIONS IMMEDIATELY PRIOR TO AND DURING THE PLACING OF CONCRETE.
5. STAKES NOT PERMITTED IN THE FTG. AREA.

FOOTING POURED AGAINST EARTH (1)

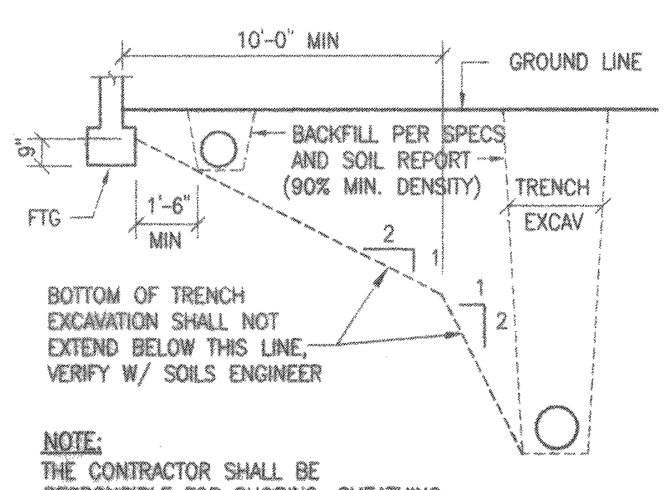

NOTE:
THE CONTRACTOR SHALL BE RESPONSIBLE FOR SHORING, SHEATHING OR OTHERWISE PREVENTING THE SIDES OF THE EXCAVATION FROM CAVING IN UNTIL ALL BACKFILL IS COMPLETED PER SPECIFICATIONS AND SOIL REPORT.

EXCAVATIONS PARALLEL TO FOOTING (2)

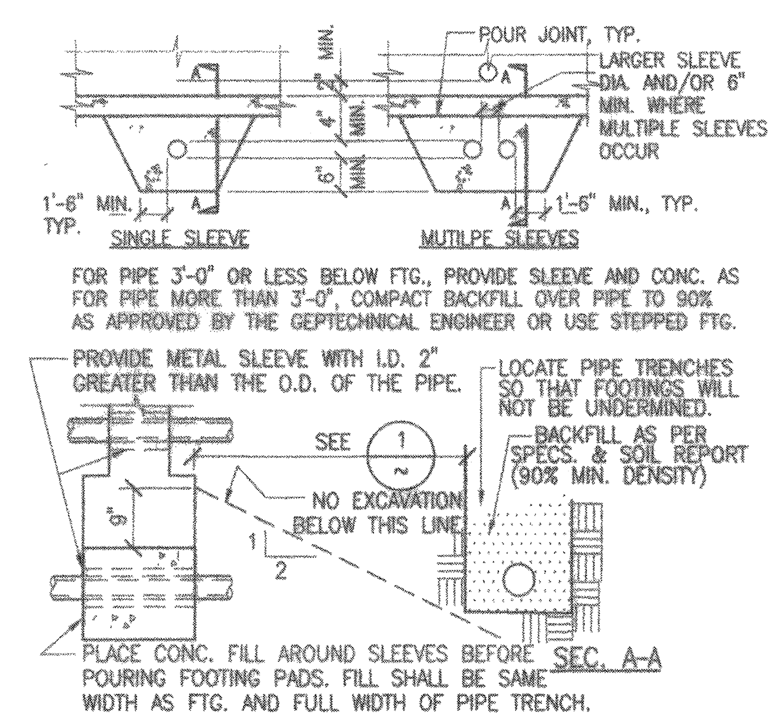

PIPE TRENCHES (3)

NOTES:
1. PIPES SHALL NOT BE PLACED THRU OR UNDER ANY COL. PAD FTG.
2. NOT USED
3. NOT USED
4. THE TERMS "PIPES" & "CONDUITS" ARE SYNONYMOUS.

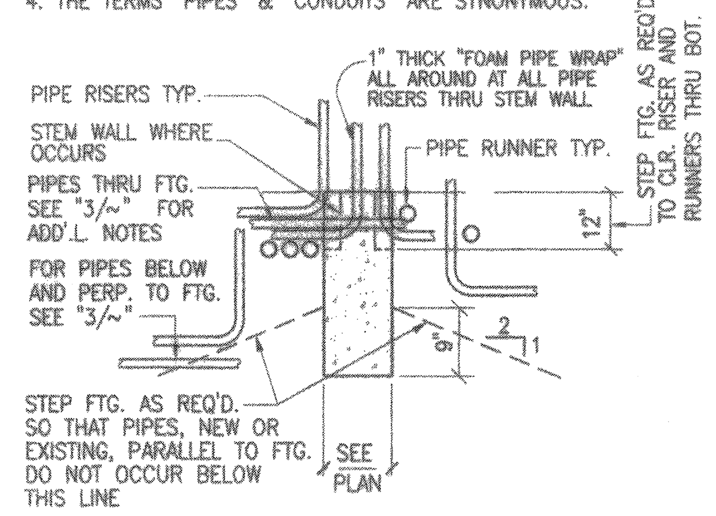

TYPICAL PIPES AT FTG. (4)

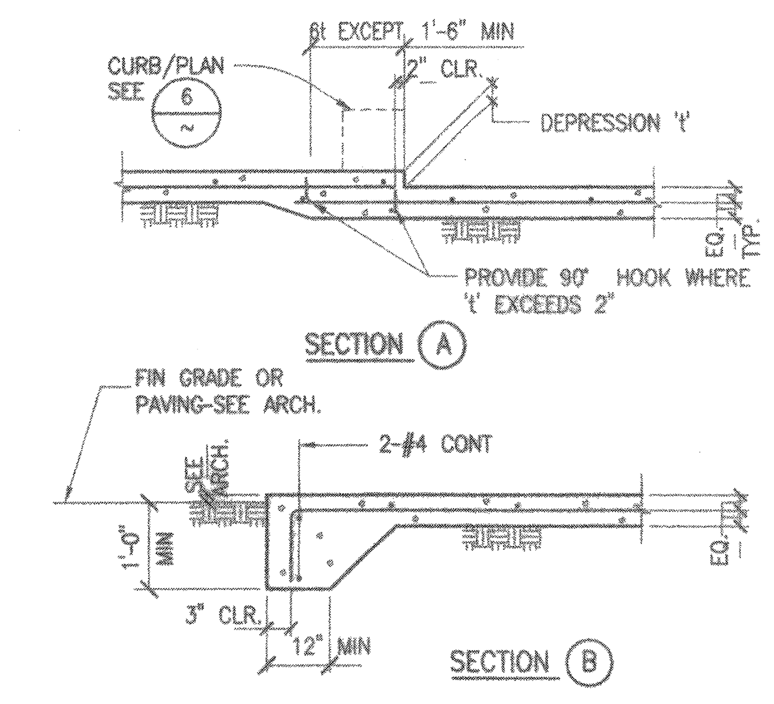

DEPRESSED SLAB AND SLAB EDGE (5)

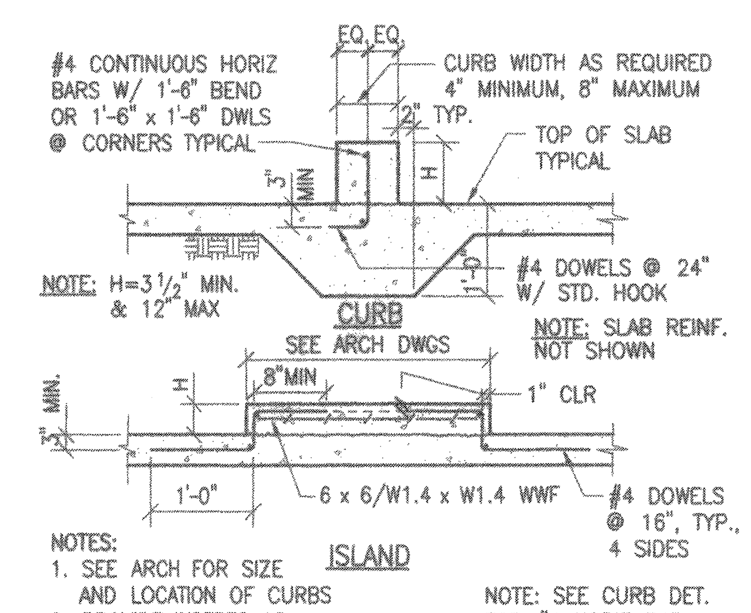

NOTES:
1. SEE ARCH FOR SIZE AND LOCATION OF CURBS
2. PROVIDE INSERTS AS REQ'D BY ARCH & MECH DRAWINGS

NOTE: SEE CURB DET. FOR #4 HORIZ BAR REQUIREMENTS

CONCRETE CURBS AND ISLANDS (6)

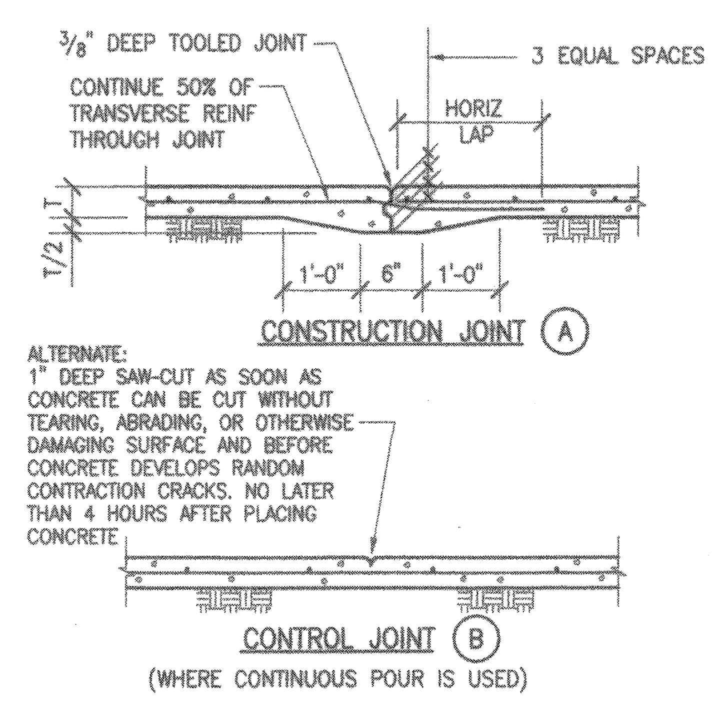

JOINTS IN SLAB ON GRADE (7)

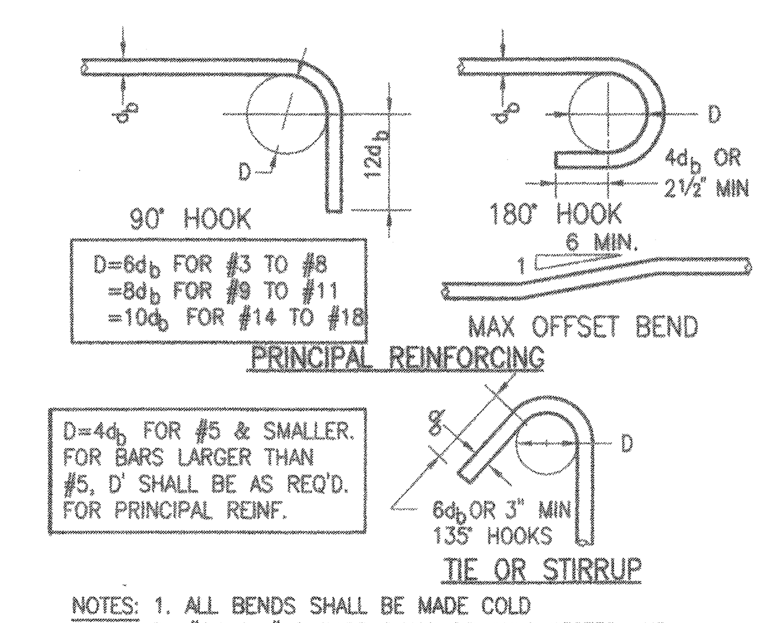

NOTES: 1. ALL BENDS SHALL BE MADE COLD
2. #14 & #18 BARS SHALL BE BEND-TESTED AND APPROVED BY DSA PRIOR TO USE IN PROJECT.

BAR BENDS (8)

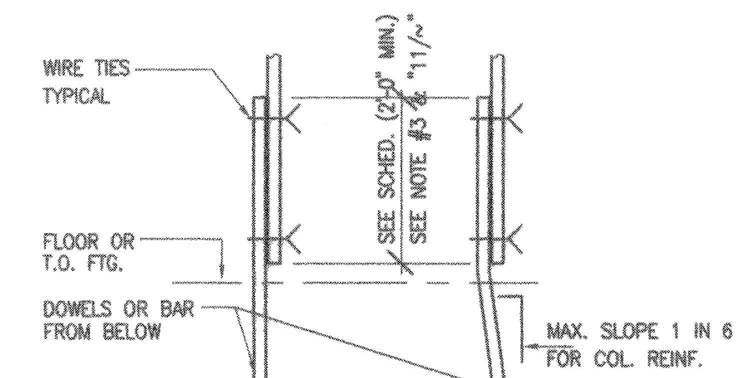

NOTES:
1. ALL VERTICAL REINFORCING FOR COLUMNS, PIERS AND WALLS SHALL BE DOWELED AS SHOWN EXCEPT SPECIFIC DETAILS ON DRAWINGS SHALL GOVERN IN CASES OF CONFLICT.
2. DOWELS SHALL BE THE SAME GRADE, SIZE AND NUMBER AS VERTICAL REINFORCING.
3. BARS OF #8 & LARGER SHALL BE SPLICED BY WELDING PER "12/~".

VERTICAL REINFORCING LAP SPLICE FOR CONCRETE AND MASONRY (9)

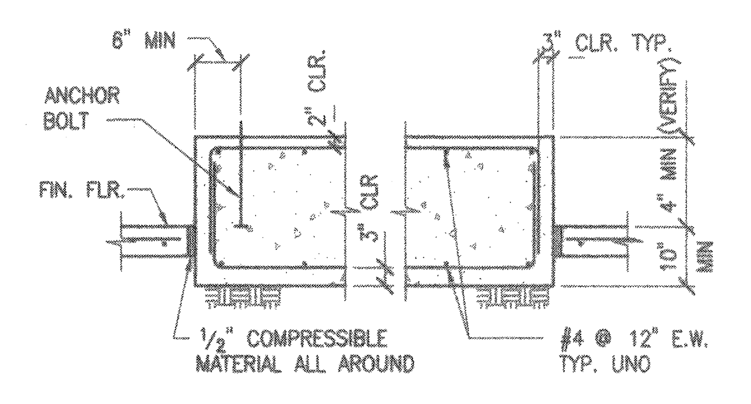

NOTE: SEE MECHANICAL AND ELECTRICAL DRAWINGS FOR THE FOLLOWING:
1. LOCATION AND DIMENSIONS OF PADS AND BASES
2. DETAILS OF STRUCTURAL SLABS, SUPPORTS AND ISOLATORS.
3. LOCATION AND SIZE OF ANCHOR BOLTS.

CONCRETE BASE AND SLAB FOR EQUIPMENT (10)

SCHEDULE I

LOCATION IN STRUCTURE	CONC f'c PSI	STEEL GRADE KSI	3	4	5	6	7	8	9	10	11
			BAR SIZE / L = LAP SPLICE IN INCHES								
BARS OF BEAMS, JOISTS, ELEVATED SLABS, SPANDRELS AND FOOTINGS	3000	60	17	22	28	33	48	55	62	70	78
	4000	60	15	19	24	28	42	47	54	60	67

SCHEDULE II

LOCATION IN STRUCTURE	CONC f'c PSI	STEEL GRADE KSI	3	4	5	6	7	8	9	10	11
			BAR SIZE / L = LAP SPLICE IN INCHES								
TOP BARS* OF BEAMS, JOISTS, ELEVATED SLABS, SPANDRELS AND FOOTINGS	3000	60	22	29	37	47	62	71	81	97	101
	4000	60	19	25	32	37	54	62	70	78	87
WALL STEEL HORIZONTAL, VERTICAL, & DOWELS & GRD. BMS.	3000	60	29	38	47	56	81	92	105	118	131
	4000	60	27	33	42	48	70	81	91	101	113
WALL STEEL HORIZONTAL, VERTICAL & DOWELS AT MASONRY	fm'=1500	60	← 60 DIA. TYP. → 72 DIA. AT JAMB, ENDS, CANTILEVER YARD & RETAINING WALLS, CORNERS AND CHORD					WELD SPLICE			

NOTES:
1. THE SCHEDULES SHOWN ON THIS DETAIL APPLY TO REGULAR WEIGHT CONCRETE @ 145 TO 150 PCF.
2. THE SMALLER BAR LAP LENGTH SHALL BE USED WHEN SPLICING DIFFERENT SIZE BARS.
3. LAP LENGTHS SPECIFICALLY DETAILED ON DRAWINGS SHALL GOVERN IN LIEU OF THE LAP LENGTHS SCHEDULED HERE.
4. THE CONTRACTOR, AT HIS OPTION, MAY USE A BUTT WELDED SPLICE IN LIEU OF THE LAP SPLICE SHOWN-SEE DETAIL "17/S1-3".
5. * TOP BARS ARE HORIZONTAL BARS PLACED SO THAT 12" OR MORE OF FRESH CONCRETE IS CAST IN THE MEMBER BELOW THE BAR. USE SCHEDULE II FOR LAP LENGTHS FOR TOP BARS IN SLABS WHERE MORE THAN 12" OF FRESH CONCRETE IS CAST BELOW THEM.
6. ALL DETAILING AND PLACING OF REINFORCING SHALL COMPLY WITH THESE LAP SPLICE SCHEDULES AND DETAILS, UNLESS SPECIFICALLY DETAILED OTHERWISE ON THE DRAWINGS.
7. BUNDLED BAR SPLICES:
a) INDIVIDUAL BAR SPLICES WITHIN THE BUNDLE SHALL NOT OVERLAP EACH OTHER.
b) INCREASE LAP LENGTH 20% AT THREE BAR BUNDLES.
c) INCREASE LAP LENGTH 33% AT FOUR BAR BUNDLES
8. ADJACENT SPLICES OF WALL BARS SHALL BE STAGGERED. SPLICES IN TWO CURTAINS SHALL NOT OCCUR IN THE SAME LOCATION.
9. LAP SPLICE FOR REINFORCING IN CONCRETE CHORDS AND DRAGS SHALL BE AS SCHEDULED FOR HORIZONTAL WALL STEEL.
10. STANDARD HOOKS IN LIGHTHEIGHT CONCRETE SHALL HAVE TAILS 25% LONGER THAN SCHEDULED.
11. DOWELS SHALL BE THE SAME GRADE, SIZE, SPACING AS VERTICAL REINFORCING U.N.O.

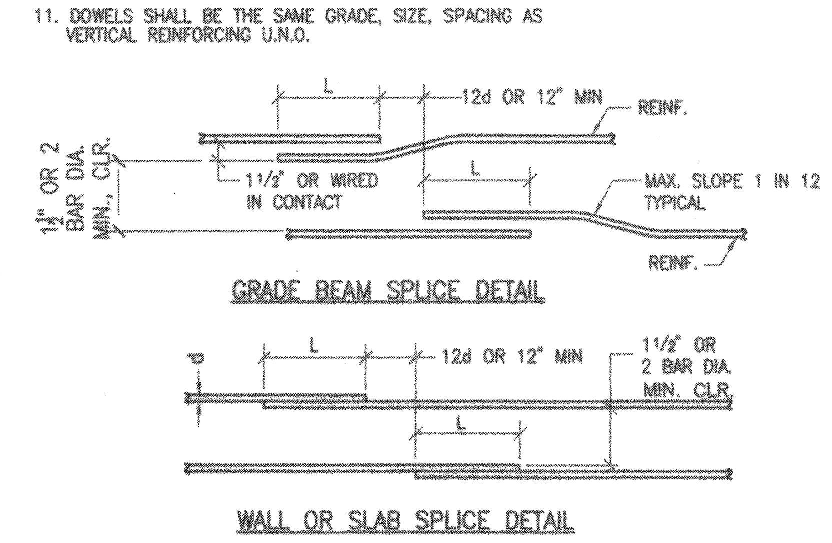

REGULAR WEIGHT CONC. AND MASONRY REINF. LAP SPLICE SCHEDULE (11)

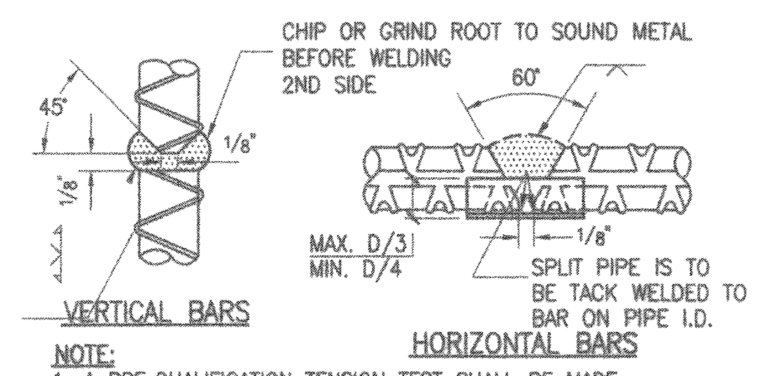

NOTE:
1. A PRE-QUALIFICATION TENSION TEST SHALL BE MADE BY AN APPROVED TESTING LABORATORY ON SAMPLES OF EVERY SIZE BAR BEING WELDED.
2. SPLICE SHALL DEVELOP AT LEAST 125% OF SPECIFIED YEILD STRENGTH, Fy, OF THE BAR.
3. MATERIALS, CONDITIONS AND WELDING PROCEDURES UTILIZED SHALL COMPLY WITH THE CURRENT APPLICABLE BUILDING CODE AND THE REQUIREMENTS OF THE GOVERNING INSPECTION AGENCY.
4. ALL COSTS INCURRED FOR OBTAINING APPROVALS SHALL BE BORNE BY THE GENERAL CONTRACTOR.

BUTT WELDED REINFORCING BAR SPLICES (12)

San Gabriel Unified School District

408 Junipero Serra
San Gabriel, CA 91776

IBI GROUP

ARCHITECTS ENGINEERS PLANNERS

ARCHITECT:
IBI Group
18401 Von Karman Avenue, Suite 110
Irvine, California 92612
Phone 949-833-5588
Fax 949-833-5511

STRUCTURAL ENGINEER:
Martin, Chow & Nakabara, Inc.
3185-C Airway Avenue
Costa Mesa, CA 92626
Phone 714-979-3003
Fax 714-979-3259
MCN 08006

MECHANICAL ENGINEER:
Fundament & Associates
26 Executive Park #100
Irvine, CA 92614
Phone 949-251-1131
Fax 949-251-9434

ELECTRICAL ENGINEER:
FBA
3420 Irvine Avenue, Suite 200
Newport Beach, CA 92660-3189
Phone 714-852-9995
Fax 714-852-1657

CIVIL ENGINEER:
Snipes-Dye Associates
8348 Center Drive, Suite G
La Mesa, CA 91942-2910
Phone 619-697-9234
Fax 619-460-2033

LANDSCAPE ENGINEER:
IBI Group
10 Exchange Place, Suite 112
Slat Lake City, UT 84111 USA
Phone 801-532-4233
FAX 801-532-4231

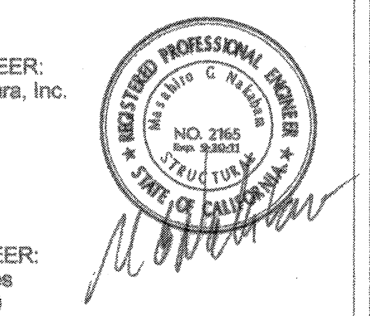

File # 19-84
IDENTIFICATION STAMP
DIV. OF THE STATE ARCHITECT
OFFICE OF REGULATION SERVICES
03-112620
AC ___ FLS ___ SS ___
DATE ___

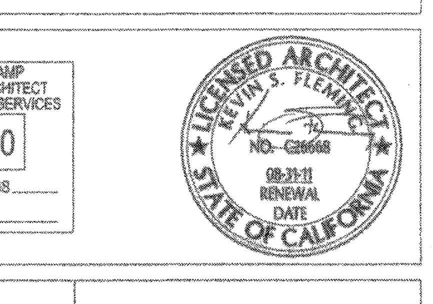

This drawing, as an instrument of service, is the property of the Architect and may not be reproduced without their permission and unless the reproduction carries their name. All design and other information show on this drawing are for the use on the specified project only and shall not be used otherwise without written permission of the Architect.

Written dimensions shall have precedence over scaled dimensions. Contractors shall verify and be responsible for all dimensions and conditions on the job and the Architect shall be informed of any variations from the dimensions and conditions show on the drawing. Shop drawings shall be submitted to the Architect for approval before proceeding with fabrication.

Del Mar High School

312 Del Mar Ave
San Gabriel, CA 91776

TYPICAL DETAILS

Project Number	20318
Date	02.23.10
Drawn By	STF
Checked By	MGN

S0.2

Scale