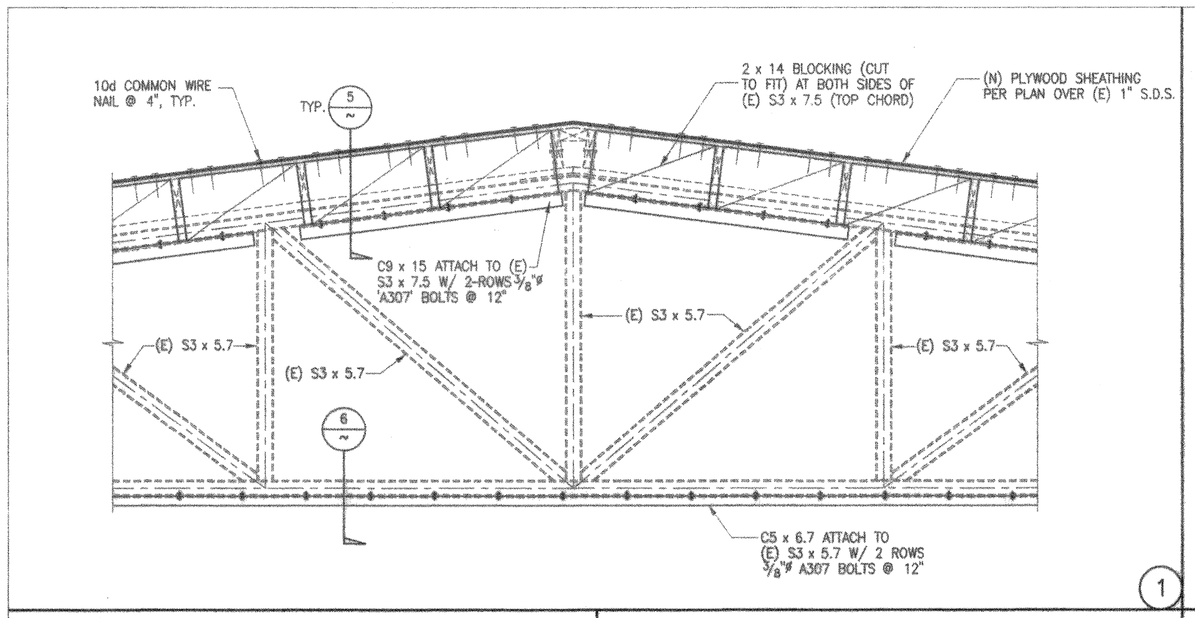

1

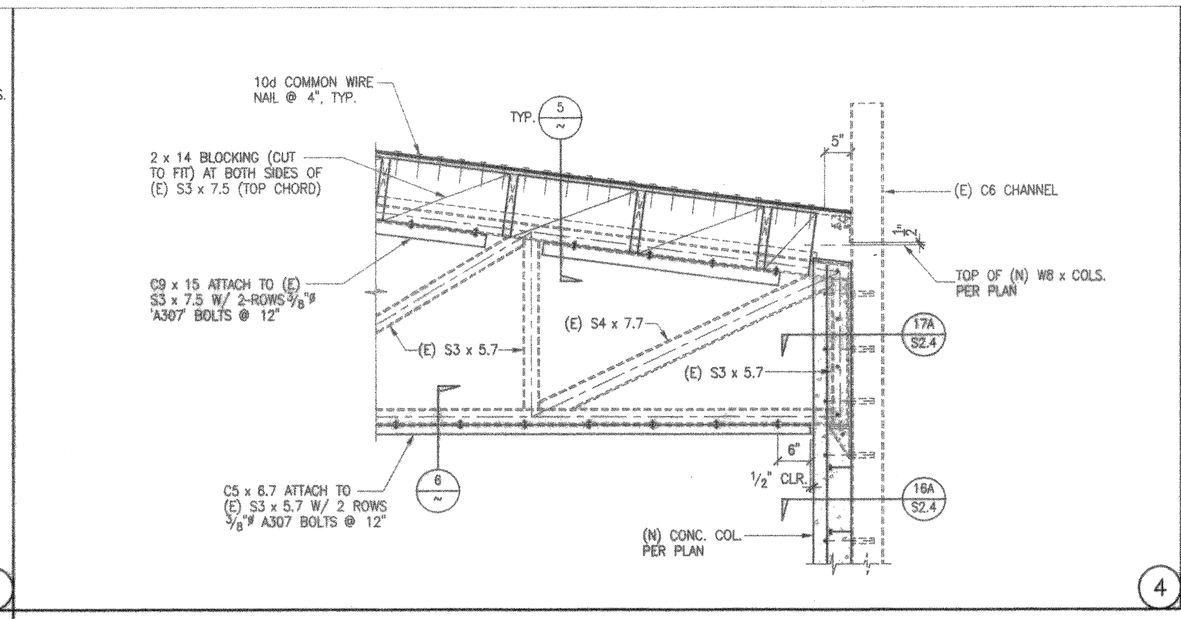

4

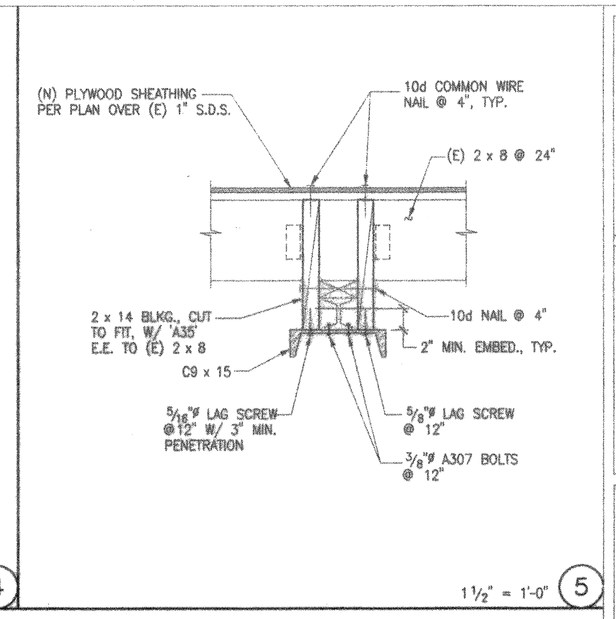

1 1/2" = 1'-0" 5

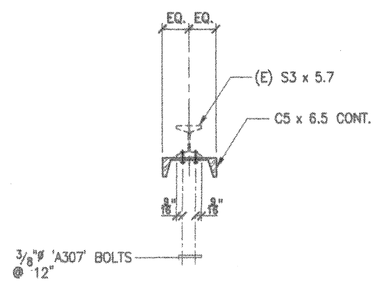

1 1/2" = 1'-0" 6

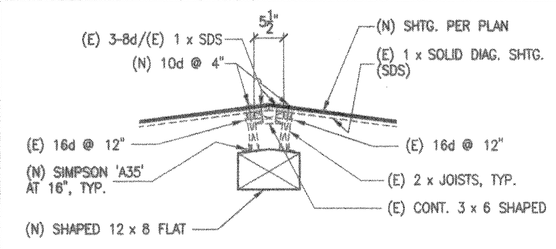

DETAIL AT RIDGE (A)

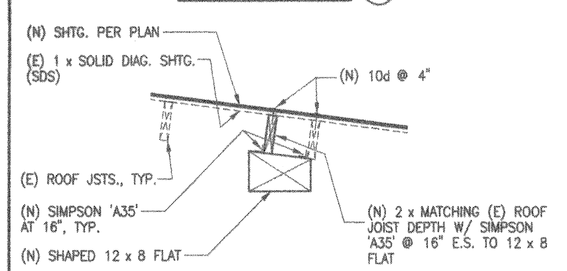

DETAIL AWAY FROM RIDGE (B)

7

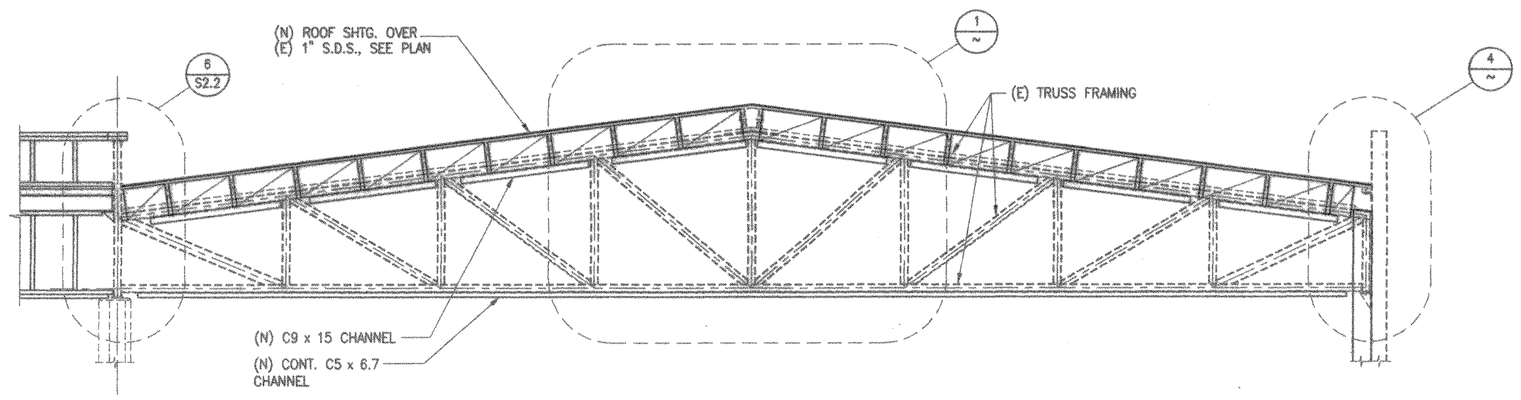

EXISTING TRUSS ELEVATION

3/8" = 1'-0" 10

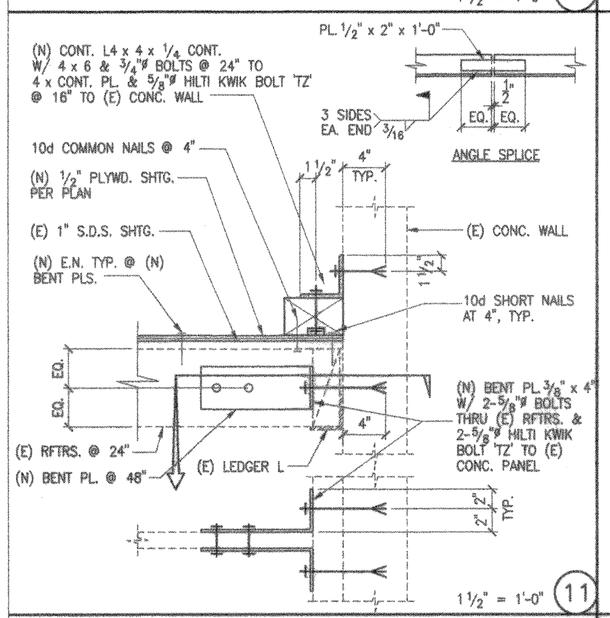

1 1/2" = 1'-0" 11

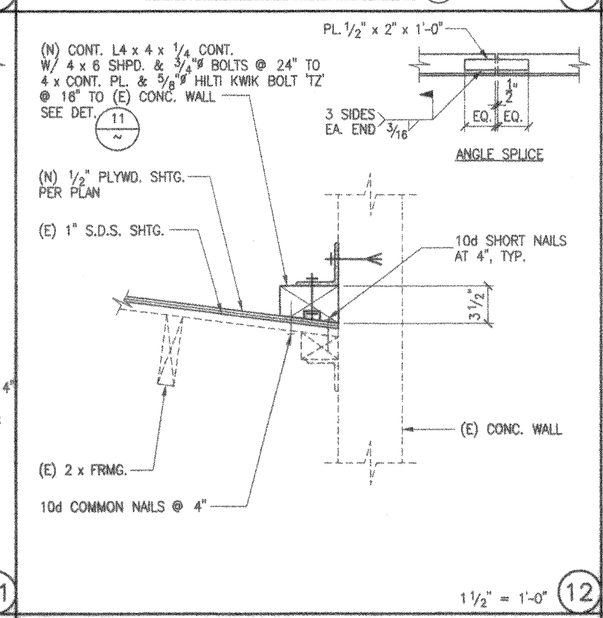

1 1/2" = 1'-0" 12

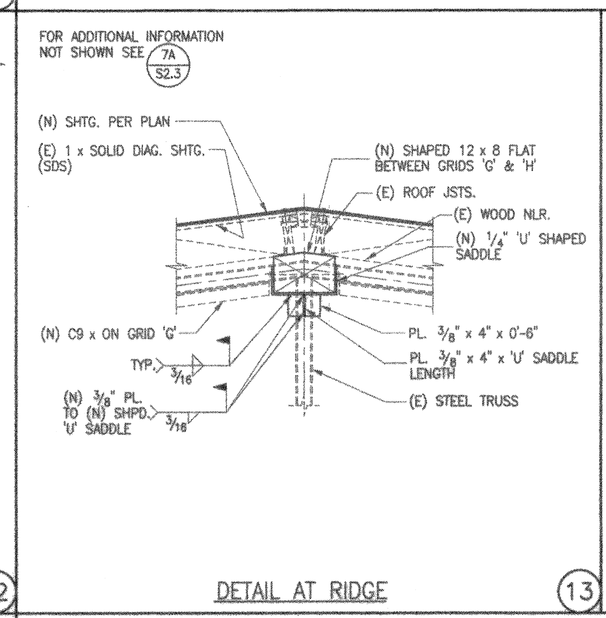

DETAIL AT RIDGE

13

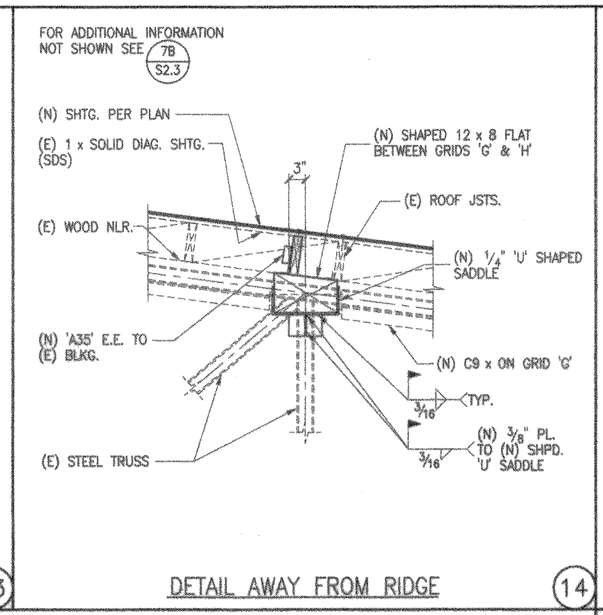

DETAIL AWAY FROM RIDGE

14

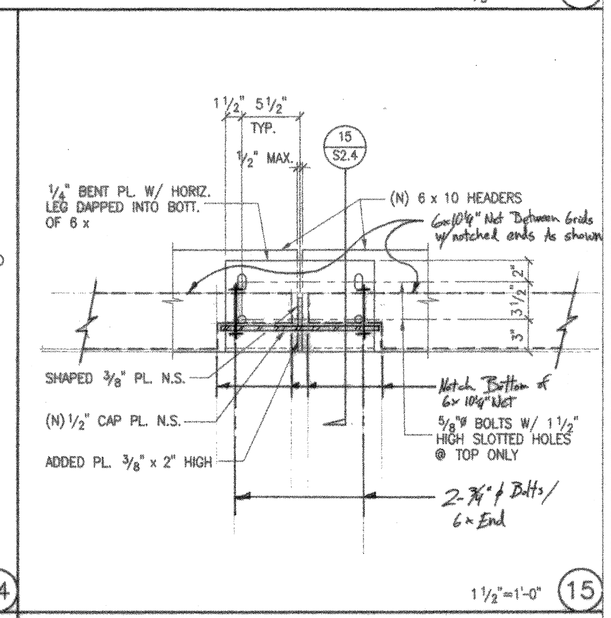

1 1/2"=1'-0" 15

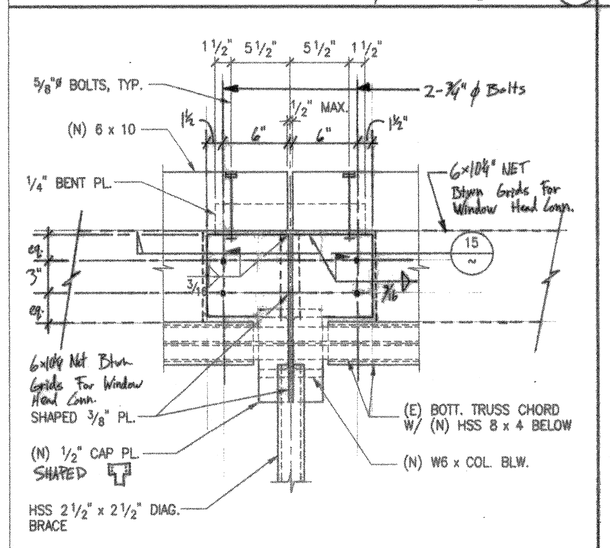

PLAN VIEW

1 1/2" = 1'-0" 16

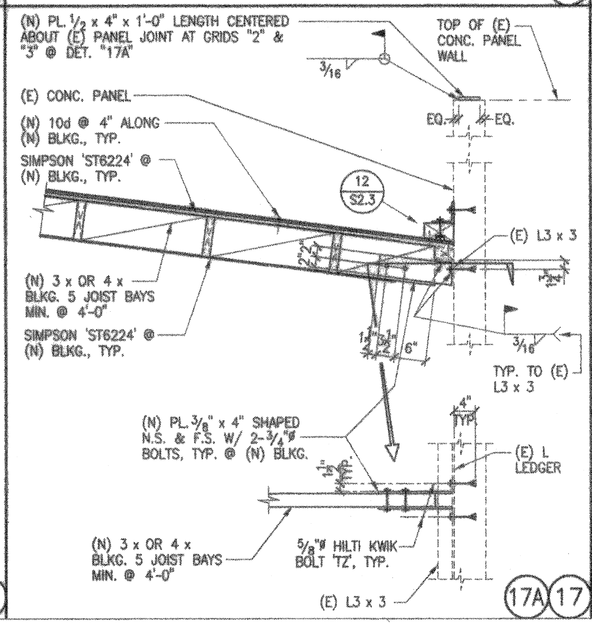

17A 17

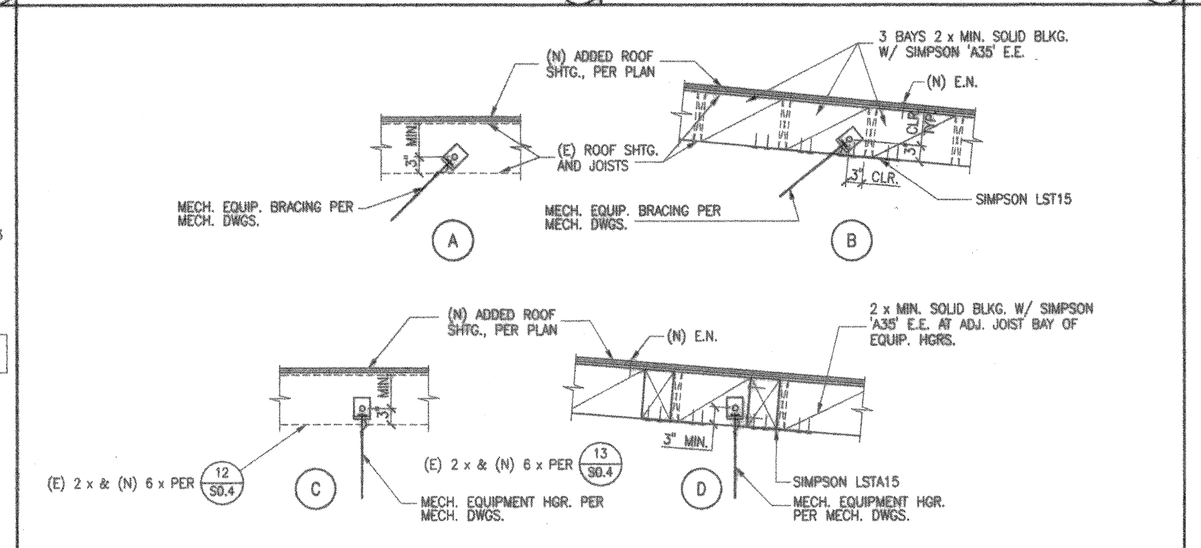

TYPICAL HANGER AND BRACING FOR SUSPENDED EQUIPMENT

19

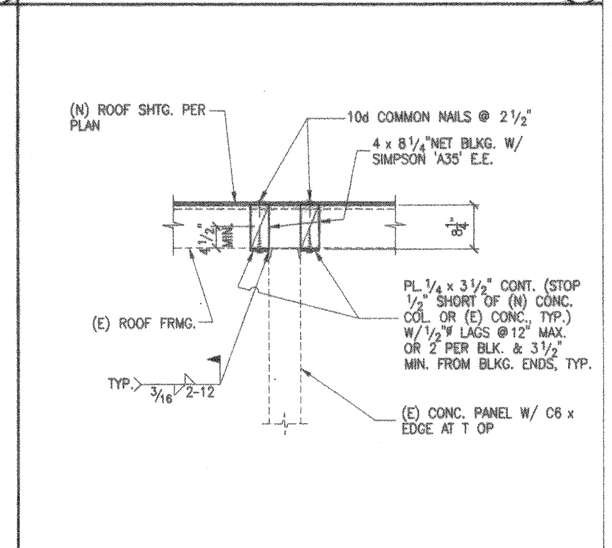

20

San Gabriel Unified School District

408 Junipero Serra
San Gabriel, CA 91776

IBI GROUP

ARCHITECTS ENGINEERS PLANNERS

ARCHITECT:
IBI Group
18401 Von Karman Avenue, Suite 110
Irvine, California 92612
Phone 949-833-5588
Fax 949-833-5511

STRUCTURAL ENGINEER:
Martin, Chow & Nakabara, Inc.
3185-C Airway Avenue
Costa Mesa, CA 92626
Phone 714-979-3003
Fax 714-979-3259
MCN 08006

MECHANICAL ENGINEER:
Fundament & Associates
26 Executive Park #100
Irvine, CA 92614
Phone 949-251-1131
Fax 949-251-9434

ELECTRICAL ENGINEER:
FBA
3420 Irvine Avenue, Suite 200
Newport Beach, CA 92660-3189
Phone 714-852-9995
Fax 714-852-1657

CIVIL ENGINEER:
Snipes-Dye Associates
8348 Center Drive, Suite G
La Mesa, CA 91942-2910
Phone 619-697-9234
Fax 619-460-2033

LANDSCAPE ENGINEER:
IBI Group
10 Exchange Place, Suite 112
Slat Lake City, UT 84111 USA
Phone 801-532-4233
FAX 801-532-4231

REGISTERED PROFESSIONAL ENGINEER — MASAHIRO G. NAKABARA — NO. 2165 — Exp. 9-30-11 — STRUCTURAL — STATE OF CALIFORNIA

File # 19-94
IDENTIFICATION STAMP
DIV. OF THE STATE ARCHITECT
OFFICE OF REGULATION SERVICES
03-112620
AC ____ FLS ____ SS ____
DATE ____

LICENSED ARCHITECT — KEVIN S. FLEMING — NO. C26668 — 09-31-11 RENEWAL DATE — STATE OF CALIFORNIA

This drawing, as an instrument of service, is the property of the Architect and may not be reproduced without their permission and unless the reproduction carries their name. All design and other information show on this drawing are for the use on the specified project only and shall not be used otherwise without written permission of the Architect.

Written dimensions shall have precedence over scaled dimensions. Contractors shall verify and be responsible for all dimensions and conditions on the job and the Architect shall be informed of any variations from the dimensions and conditions show on the drawing. Shop drawings shall be submitted to the Architect for approval before proceeding with fabrication.

Del Mar High School

312 Del Mar Ave
San Gabriel, CA 91776

FRAMING DETAILS

Project Number	20318
Date	02.23.10
Drawn By	STF
Checked By	MGN

S2.3

Scale